ORTAL
YOUR LIFE. YOUR FIRE

75H RS

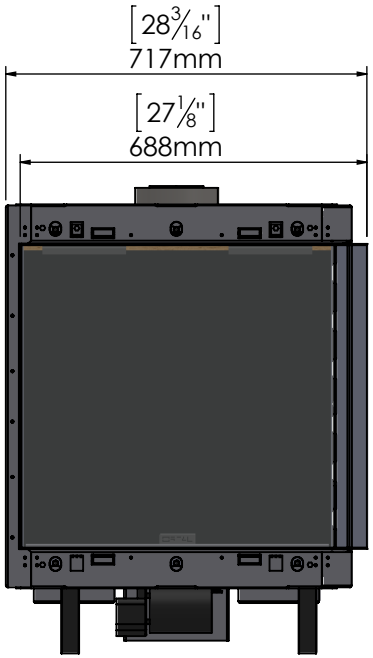

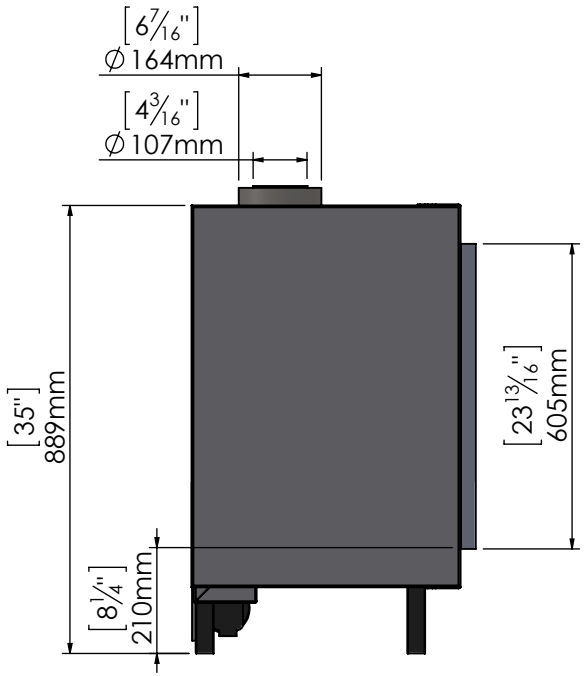

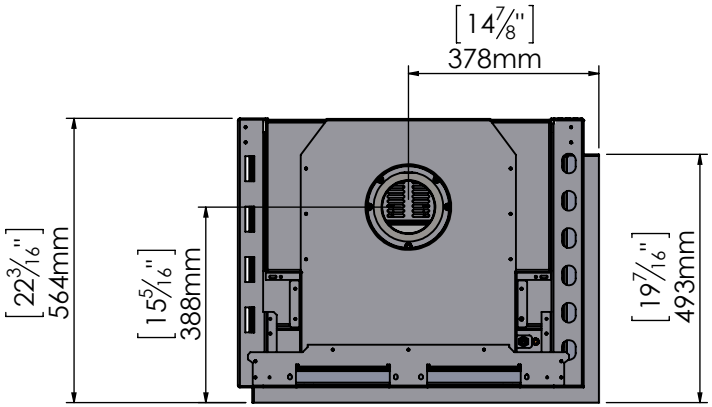

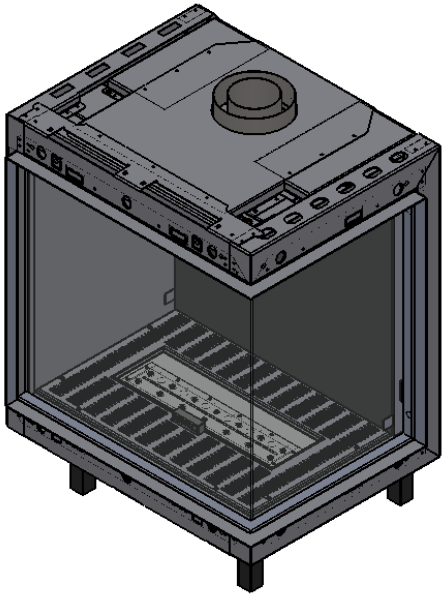

8/8/2017