ORTAL
YOUR LIFE. YOUR FIRE

75 RS

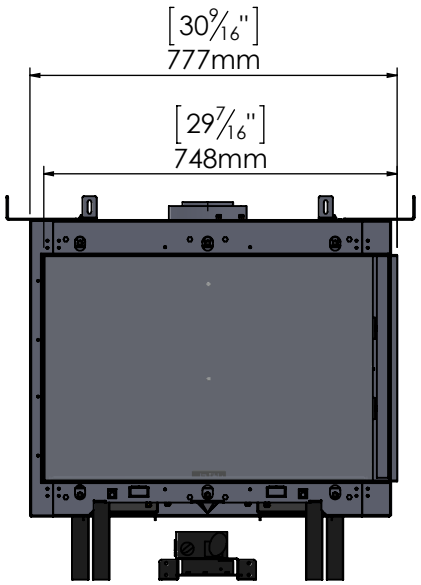

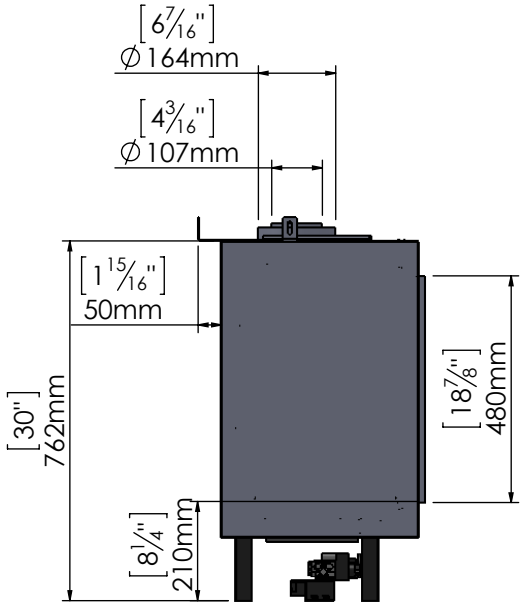

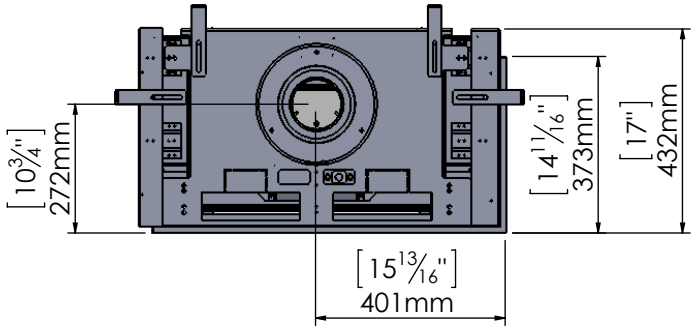

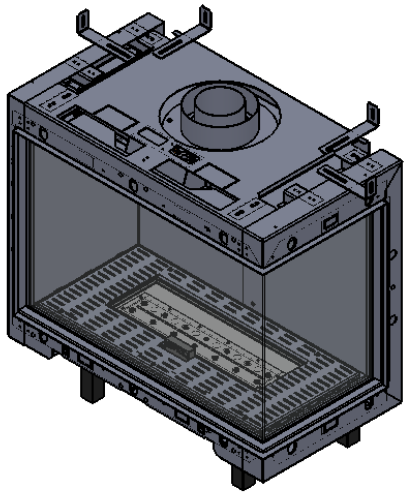

8/8/2017