ORTAL
YOUR LIFE. YOUR FIRE

**Wilderness 150 FSN DEF**

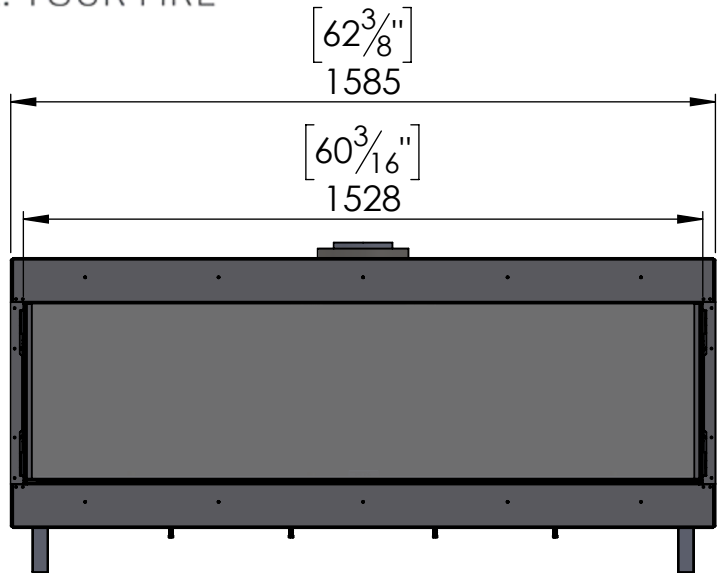


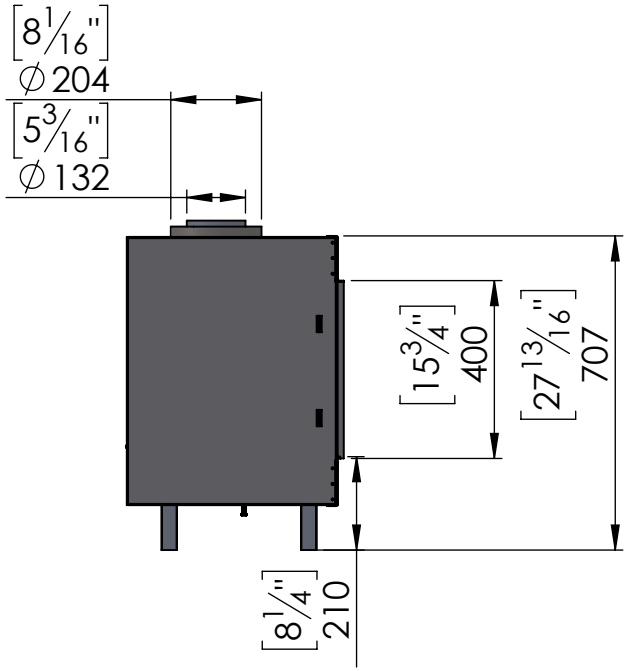


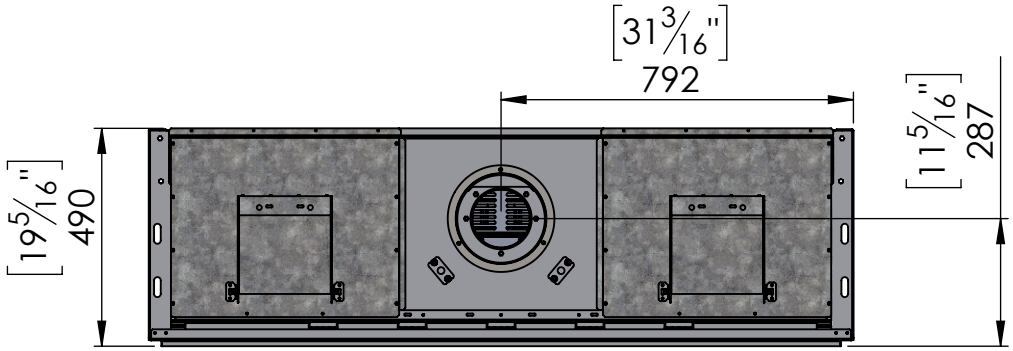


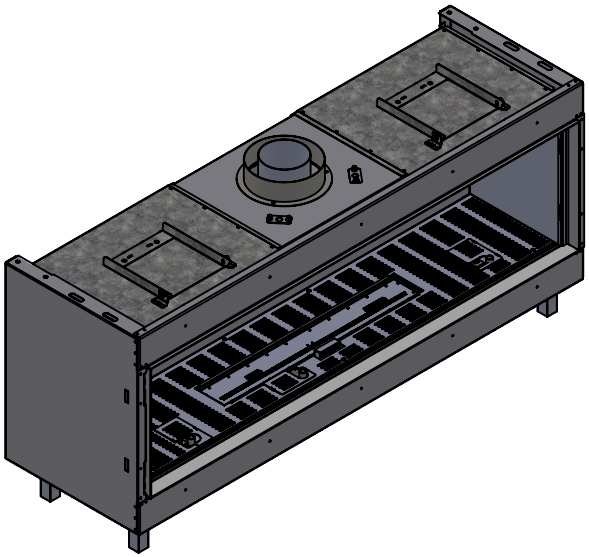

5/11/2021