ORTAL
YOUR LIFE. YOUR FIRE

Wilderness 150 RS

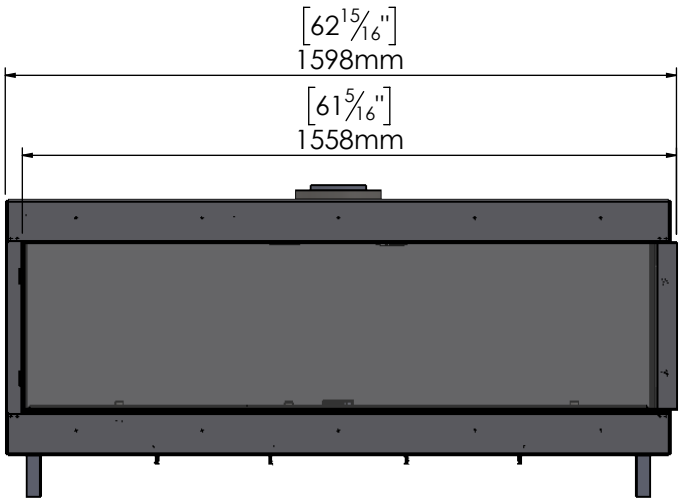

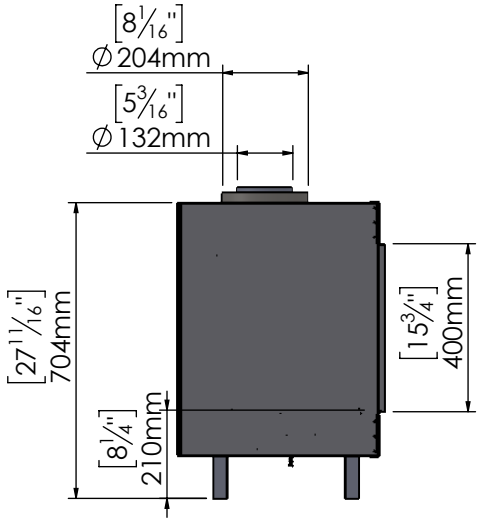

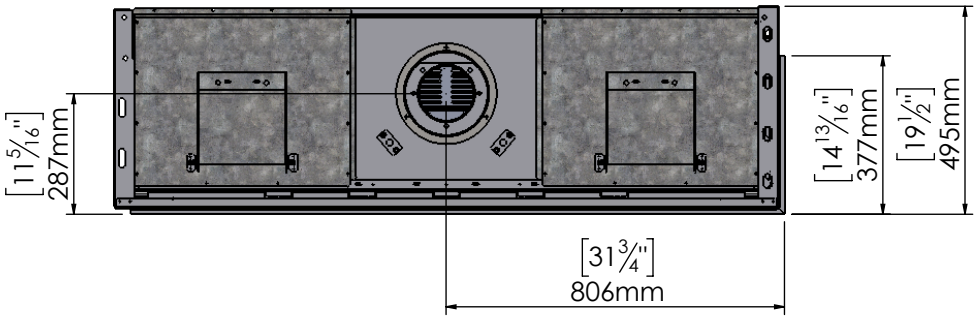

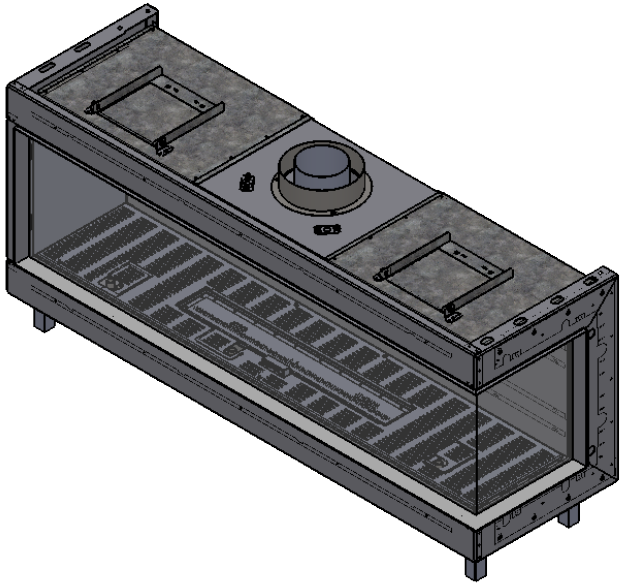

1/28/2021